codice prodotto / product code

ART.
F1100

descrizione / description
Avenger Pump Cup with Baby 6in Fixed Pin 16mm/ 5/8in

data/ date	da - a / from - to
2025-03-17	From serial number 000000
Rev. 0001	

Videndum Media Solutions Spa

RF10501

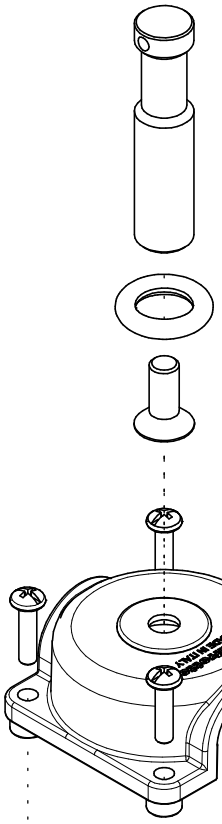

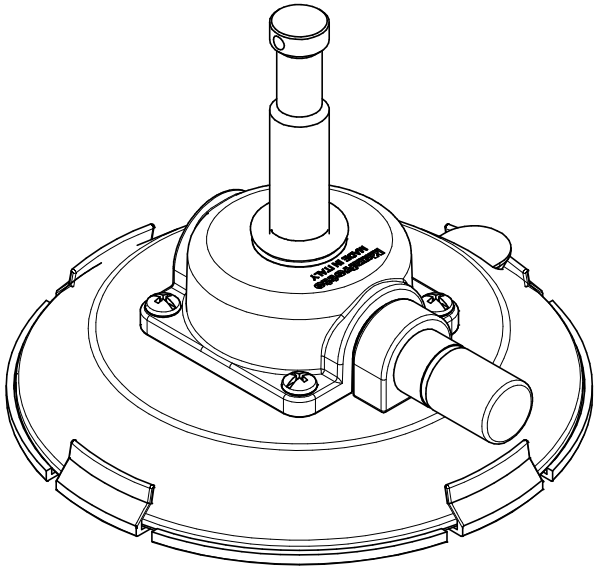

RF10004

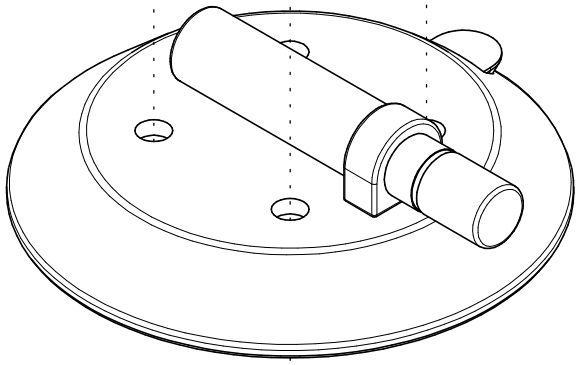

RF10010

