codice prodotto / product code

ART.
F810

descrizione / description
Avenger Wall Plate, Baby w/ 16 mm/ 5/8 in

data/ date	da - a / from - to
2025-03-10	From serial number
Rev. 0001	000000

Videndum Media Solutions Spa

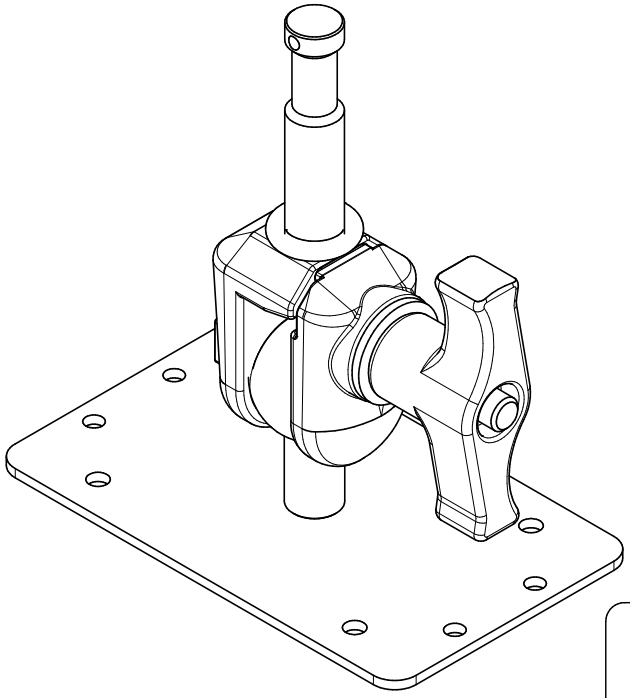

RF08004

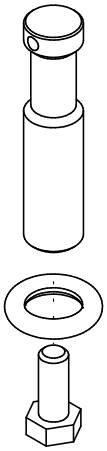

R3,0322

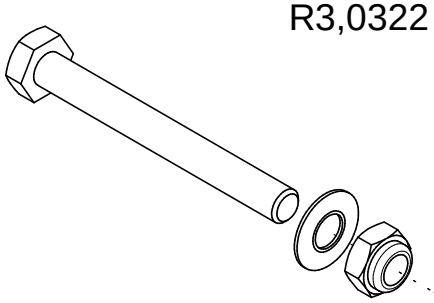

RF10003

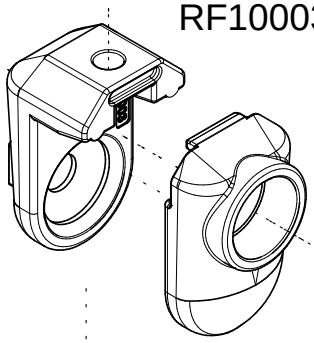

RD01507

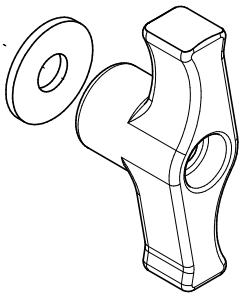

RF08005

